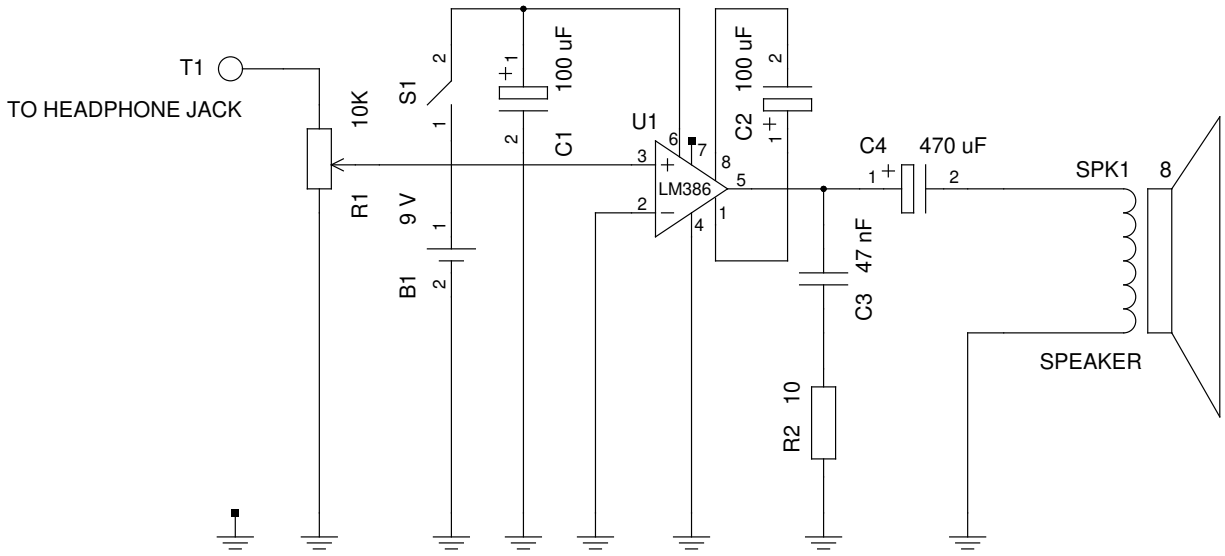

TITLE High-gain amplified speaker for portable audio players	
FILE: amplified-speaker.sch	REVISION: 1
PAGE 1 OF 1	DRAWN BY: Sergio García-Cuevas González