Each lamp consumes ~150 mA at 5 V.

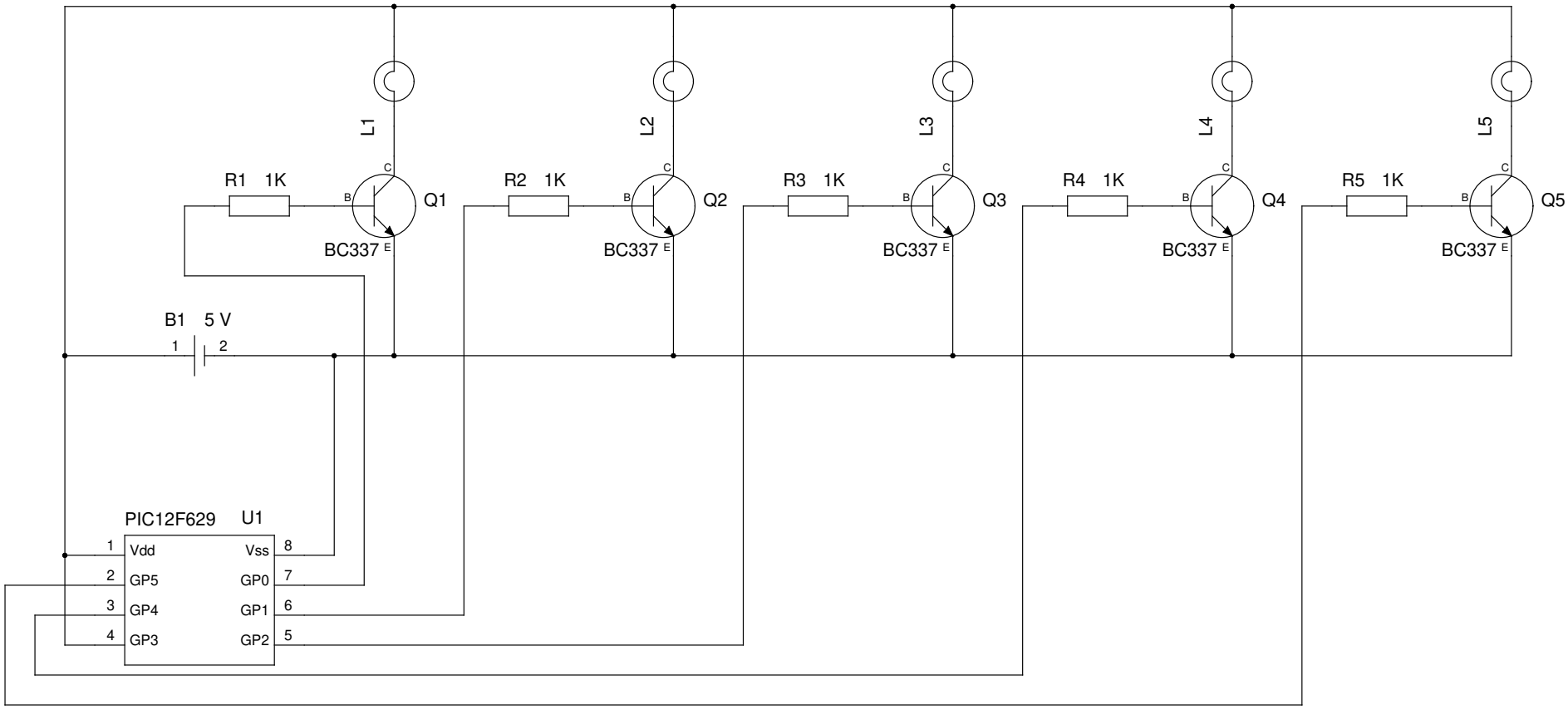


| | |
|---|---|
| TITLE Pseudo-random flicker driver. | |
| FILE: flicker.sch | REVISION: 2 |
| PAGE 1 OF 1 | DRAWN BY: Sergio García-Cuevas González |