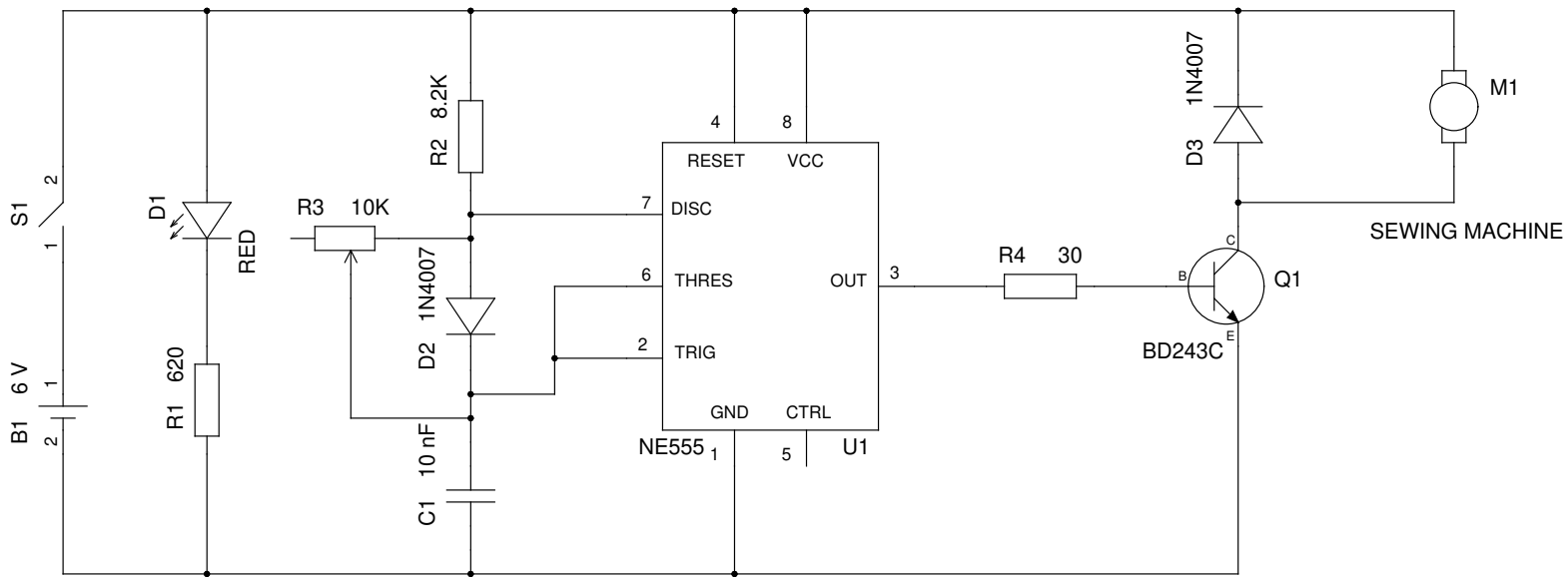

TITLE Chopper speed regulator for a handheld sewing machine	
FILE: chopper.sch	REVISION: 1
PAGE 1 OF 1	DRAWN BY: Sergio García-Cuevas González